# COMPACT CRAWLER BOOM LIFTS

JLG®
reachingout™

COMPACT CRAWLER BOOMS

# REACHING OUT

Now you can go more places around the job site thanks to the low weight and non-marking tracks on the Compact Crawler boom. Available in five models with working heights ranging from 45 ft to 76 ft, JLG® Compact Crawler boom lifts feature a tracked wheel carriage that climbs steps and a narrow chassis for access through doorways, gates and yards.

## VERSATILE AND PRACTICAL

*"Jobs that used to require tricky positioning are much easier to access now."*

## BECAUSE YOU NEED TO REACH WHAT OTHERS CAN'T

# X700AJ

# ALL OF YOUR OVERHEAD TASKS WITHIN REACH

Whether you're working indoors or outside, the Compact Crawler boom has your job covered. With enhanced maneuverability and better access, you've got the ability to go more places thanks to its low profile, non-marking tracks and compact dimensions. The compact crawler is easy to operate with one-touch outrigger leveling, an interactive display in the platform and controls. And because the compact crawler is so lightweight, it can be set up on sensitive flooring and landscaping.

Additionally, these machines are environmentally friendly with an optional Lithium-ion battery for cleaner, greener operation. And the dual power onboard—gas or electric power, accompanied by an electric AC motor—are standard to reduce noise and emissions in public spaces. Other features include an articulating jib for greater reach, rotation of platform* and zero-turn radius with counter rotation.

*Not available on X390AJ.

**FORK POCKETS AND LIFT HOOKS**
Are standard on new X500AJ and X600AJ models.

***"While indoors, I can quietly operate at full speed thanks to the Lithium-ion battery. Plus, I can easily fit through narrow doorways."***

## FEATURES

**Optional Quick-Start Lithium-Ion Battery**
Produces zero emissions and quiet operation.

**Ease of Transport**
Fits on a trailer or tilt-back truck (low weight, good gradeability, compact).

# X600AJ

## Greater Access

Compact dimensions for getting into hard-to-reach areas.

## Self-Leveling

One-touch outrigger leveling.

# PUTTING YOUR WORK ABOVE EVERYTHING

When it comes to JLG® Ground Support, it's all about you. Your productivity. Your profitability. Your uptime. From the purchase of your first piece of equipment straight through to the training, parts and maintenance that follows.

- **Customer Service Call Center**
  You can be assured we'll be giving an all-out effort to support you. Just think of us as your personal on-call, full-service support team. We make it happen. Period.
- **Financial Solutions**
  Maximizing your profits. Preserving your cash flow. Let our financing specialists help choose the program designed specifically for your needs.
- **Aftermarket Parts**
  Keep your equipment running at peak performance with genuine replacement parts, accessories, attachments, rebuilt and competitive parts all from one source — JLG.
- **Training**
  Knowing your equipment inside and out results in higher productivity on the job. Our instructor-led courses give you the hands-on time you need to successfully operate equipment.
- **Service Centers**
  Your needs. Your uptime. JLG is on the job to fulfill your every need, from repair, reconditioning, same-day parts and much more. We're here to support you.
- **Pre-Owned Equipment**
  As a high-value alternative to purchasing new equipment, you can search our used equipment inventory of pre-owned JLG and competitor products.

| | X390AJ | X500AJ | X550AJ | X600AJ | X700AJ |
|---|---|---|---|---|---|
| Platform Height | 39' 2" (11.9 m) | 49' (14.95 m) | 55' (16.76 m) | 59' 3" (18.05 m) | 69' 7" (21.20 m) |
| Working Height | 45' (13.71 m) | 56' (17.06 m) | 61' (18.59 m) | 66' (20.11 m) | 76' (23.16 m) |
| Horizontal Outreach | 22' (6.70 m) | 23' (7.00 m) | 21' (6.40 m) | 30' (9.1 m) | 37' (11.27 m) |
| Swing | 360° Non-continuous | 360° Non-continuous | 360° Non-continuous | 360° Non-continuous | 360° Non-continuous |
| Platform Capacity Restricted | 440 lb (200 kg) | 500 lb (227 kg) | 440 lb (200 kg) | 500 lb (227 kg) | 440 lb (200 kg) |
| Platform Capacity Unrestricted | 300 lb (136 kg) | 500 lb (227 kg) | 300 lb (136 kg) | 500 lb (227 kg) | 300 lb (136 kg) |
| Platform Rotation | N/A | 124° (+/- 62°) | 124° (+/-62°) | 124° (+/- 62°) | 124° (+/-62°) |
| Jib (Range of Articulation) | 88° (-2/-90) | 89° (0/-89) | 82.7° (0/-82.7) | 89° (0/-89) | 85° (-1/-86) |
| Platform Size<br>Standard Two person<br>Optional Single person | <br>58" x 30" (1.47 x 0.76 m)<br>31" x 24" (0.78 x 0.61 m) | <br>58" x 30" (1.47 x 0.76 m)<br>31" x 24" (0.78 x 0.61 m) | <br>58" x 30" (1.47 x 0.76 m)<br>31" x 24" (0.78 x 0.61 m) | <br>58" x 30" (1.47 x 0.76 m)<br>31" x 24" (0.78 x 0.61 m) | <br>58" x 30" (1.47 x 0.76 m)<br>31" x 24" (0.78 x 0.61 m) |
| Overall Width | 31" (0.78 m) | 31" (0.78 m) | 31" (0.78 m) | 31" (0.78 m) | 39" (0.99 m) |
| Stowed Height<br>With Pads<br>Pads Detached | <br>6' 11" (2.10 m)<br>6' 10" (2.07 m) | <br>6' 6.5" (2.00 m)<br>6' 6.5" (2.00 m) | <br>7' (2.13 m)<br>6' 6.5" (1.98 m) | <br>6' 6.5" (2.00 m)<br>6' 6.5" (2.00 m) | <br>6' 6.5" (1.99 m)<br>6' 6.5" (1.99 m) |
| Outrigger Footprint<br>Narrow | 11' x 10' 10" (3.35 m x 3.30 m)<br>N/A | 10'5" x 10' 5" (3.17 x 3.17 m)<br>N/A | 11' 2" x 11' (3.40 m x 3.35 m)<br>N/A | 10' 7" x 10' 7" (3.22 x 3.22 m)<br>N/A | 15' 5" x 15' (4.69 m x 4.57 m)<br>9' 1" x 20' 4" (2.78 m x 6.19 m) |
| Stowed Length<br>Without Basket | 13' (3.98 m)<br>11' 8" (3.56 m) | 14' 10" (4.53 m)<br>13' 8" (4.16 m) | 14' 8" (4.47 m)<br>13' 6" (4.11 m) | 16' 5" (5.01 m)<br>15' 3" (4.65 m) | 19' 8" (6.00 m)<br>18' 6" (5.64 m) |
| Track Length | 4' 1" (1.24 m) | 4' 1" (1.24 m) | 4' 1" (1.24 m) | 4' 10" (1.47 m) | 5' 9" (1.77 m) |
| Weight* | 3,814 lb (1,730 kg) | 5,071 lb (2,300 kg) | 4,718 lb (2,140 kg) | 6,571 lb (2,980 kg) | 7,050 lb (3,198 kg) |
| Ground Bearing Pressure<br>Outriggers<br>Tracks | <br>24.65 psi (1.73 kg/cm$^2$)<br>6.24 psi (0.44 kg/cm$^2$) | <br>35.53 psi (2.49 kg/cm$^2$)<br>9.72 psi (0.68 kg/cm$^2$) | <br>27.26 psi (1.92 kg/cm$^2$)<br>9.14 psi (.64 kg/cm$^2$) | <br>44.09 psi (3.09 kg/cm$^2$)<br>9.28 psi (0.65 kg/cm$^2$) | <br>43.07 psi (3.3 kg/cm$^2$)<br>7.10 psi (.49 kg/cm$^2$) |
| Drive Speed | .87 mph (1.4 km/h) | 0.99 mph (1.6 km/h) | .80 mph (1.3 km/h) | 0.99 mph (1.6 km/h) | .80 mph (1.3 km/h) |
| Gradeability | 36% | 36% | 38% | 36% | 40% |
| Slope Tolerance | 10° | 12° | 11° | 15° | 14° |
| Gasoline Engine | Honda GX270<br>9 hp (6.7 kW) | Honda iGX440<br>15 hp (11.1 kW) | Honda iGX440<br>15 hp (11.1 kW) | Honda iGX440<br>15 hp (11.1 kW) | Honda iGX440<br>15 hp (11.1 kW) |
| Electric Engine | 100Ah 48V Lithium-Ion | 100Ah 48V Lithium-Ion | 100Ah 48V Lithium-Ion | 100Ah 72V Lithium-Ion | 100Ah 72V Lithium-Ion |
| Fuel Tank Capacity (Gasoline) | 1.4 gal. (5.3 L) | 1.5 gal. (5.9 L) | 1.5 gal. (5.9 L) | 1.5 gal. (5.9 L) | 1.5 gal. (5.9 L) |
| AC Motor** | 120V 60 Hz (1.2 kW) | 120V 60 Hz (1.2 kW) | 120V 60 Hz (1.2 kW) | 120V 60 Hz (1.2 kW) | 120V 60 Hz (1.2 kW) |

*Certain options of country standards increase weight.

**Country specific options available.

## X390AJ

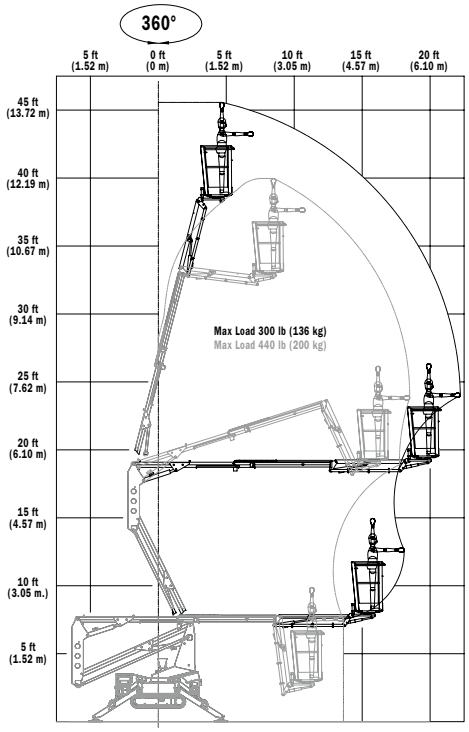


## X500AJ

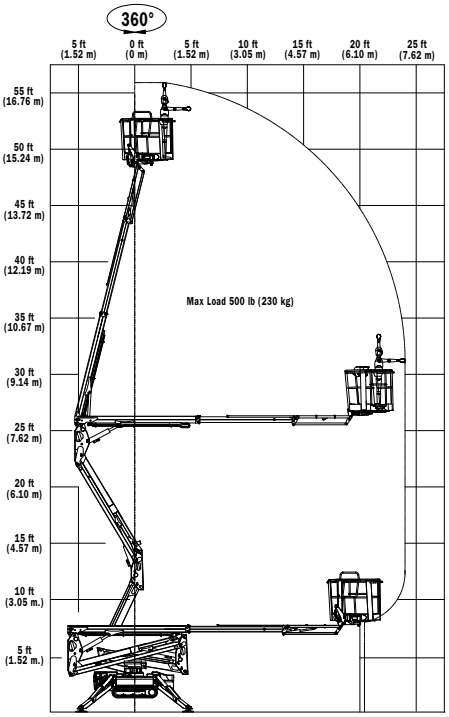


## X550AJ

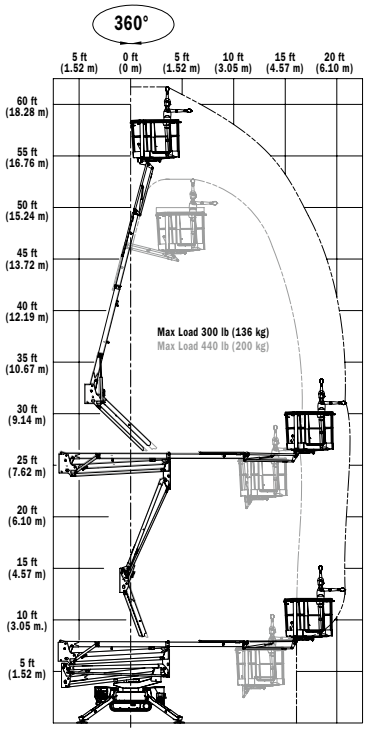


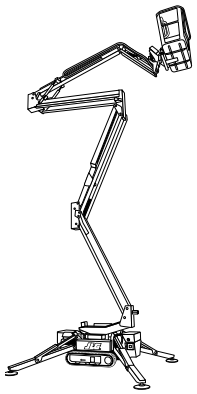

## X600AJ

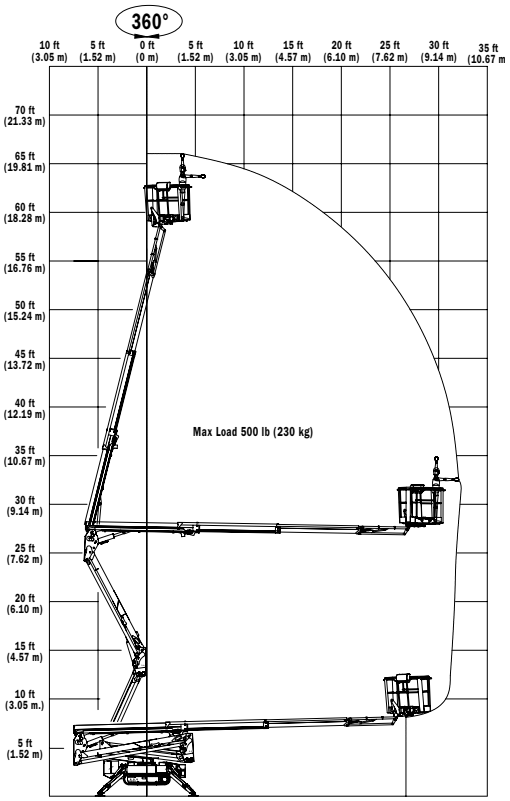


## X700AJ

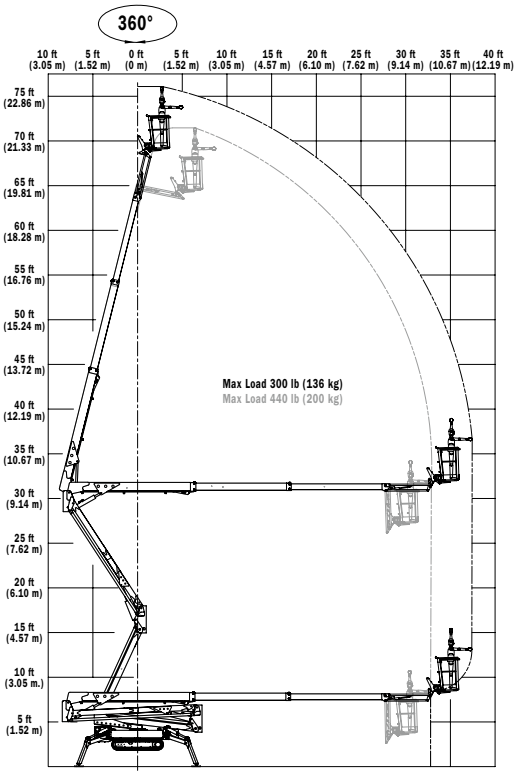


## Main Features

- Optional Lithium-ion technology.
- One-touch outrigger leveling.
- 110V-AC receptacle in platform.
- Dual power onboard.
- Standard air/water line.
- Patented quick connect platform.
- Large Teflon outrigger pads.
- LCD panel provides onboard diagnostics.


**JLG Industries, Inc.**
1 JLG Drive
McConnellsburg, PA 17233-9533
Telephone 717-485-5161
Toll-free in US 877-JLG-LIFT
Fax 717-485-6417
**www.jlg.com**
**An Oshkosh Corporation Company**



Form No.: CCB-Bro-0613
Part No.: 3131582
R111407
Printed in USA